LED & Sensors Take-Home Quiz name_____

The following program was given to you in the LED and Sensor exercise. The questions below all refer to this program.

```
/* Theremin
 * --------
 * Created 24 October 2006
 * copyleft 2006 Tod E. Kurt <tod@todbot.com
 * http://todbot.com/
 */

int potPin = 2;

int speakerPin = 7;

int val = 0;

void setup() {
  pinMode(speakerPin, OUTPUT);
}

void loop() {
  digitalWrite(speakerPin, LOW);

  val = analogRead(potPin);

  val = val*2;

  for( int i=0; i<50; i++ ) {

    digitalWrite(speakerPin, HIGH);

    delayMicroseconds(val);

    digitalWrite(speakerPin, LOW);

    delayMicroseconds(val);
  }
}
```

Questions

1. In your own words, explain what the program above does when it runs and your breadboard is configured as shown below.

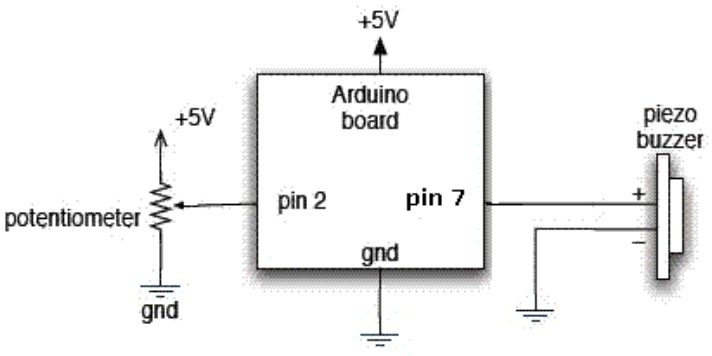

2. Some of the commands in the program above are in **bold face.** To the right of each command that is written in **bold face**, write a brief description of what that command does.

3. How many procedures are ***defined*** in the program above and what are their names.

4. In your own words, explain why changing the resistance of the potentiometer changes the tone produced by the speaker.