Circuit Bending Part 1: What we observe

Objective: Explore your toy:

- **What does it do---record your observations**
- **Create a map of what you can see**

What does it do?

Play with your toy to determine what it does. Record your observations; be precise. Treat your toy as if it were a creature and you the scientist (Dr. Frankenstein, I presume) studying it.

Looking under the hood

Remove the screws holding the housing together and put them somewhere safe, like a small cup so that you don't loose them on your desk. Make note of the locations if they are different sizes. Some screws may be hidden underneath the stickers or the battery---gentle separate the housing to identify their location.

Locate and remove the screws holding the circuit to the housing. Be careful the board could be brittle. Again be sure to save and note the location of all screws and other attachments such as nobs and push buttons.

Exploring the Circuit:

Most circuit-boards have 2 sides: the side with most of the bumpy colorful things called the "component side," and the "solder side" underneath. As Rodney Dangerfield would say, our board is so cheap, it could only afford one side. Our board is a laminate with the connections between components sandwiched between a green (the top of the board) and a brown material (the bottom of the board).

1. Begin the effort to dissect (i.e., map) your creature (i.e., circuit-board) by finding the major landmarks:
    - Identify the power source (ie., the batteries)
    - Identify the speakers (the output)
    - Identify the brain(s) there could be more than one
      This is usually a black blob. This blob is a cheap form of integrated circuit (or IC). These are also called "gum drop" ICs. An IC is a collection of microscopic electrical components working together to perform complex functions…like making sound. Some circuits use different styles of IC which look like flat black boxes with lots of metal legs; ours is a blob.

2. Identify the other components:

Can you find any of the following?

- **resisters**: little cylinders encircled by colorful stripes; in our case there are numbers on the resistor
- **capacitors**: there are 2 types:
    - small disks of dull earth tones or colorful squares
    - cylinders, upright or on their sides, usually fatter than resistors with at most one stripe
- **transistors**: 3 wire legs supporting a small black plastic blob or metal can
- **diodes**: a glass or plastic cylinder, smaller and less colorful than resisters usually having one stripe
- **LEDs** (Light Emitting Diodes): colorful transparent sources of light; like the speakers, LEDs are also used for output.
- **switches**: switches are used to turn on and off the power. There are many types of switches including push-buttons, toggles, rotary, and slides.

Charting the Territory (Creating a Map)

Maps of electronic systems are called *schematics*; they show the pieces that make up the circuit(s) and how they are connected. Look through the green covering of the circuit-board to see the darker traces of the metal connections. Representing each connection (regardless of its thickness) as a line, create a drawing representing the connections built into the circuit board, such as shown below. Make your drawing reasonably large so that you can add information later.

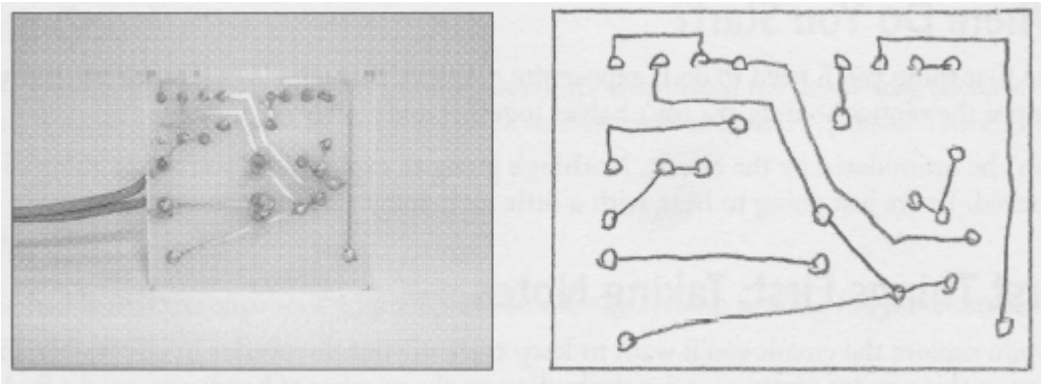

Once you have captured the connections, add the components; each component is represented by a symbol as shown below.

speaker: 

battery: 

resister: 

capacitor: 

transistor: 

diode: 

LED: 

Switches and Push-buttons: 

IC: we will use a box or circle 

Others: Is there anything else---identify that as a blob or box with a question mark in it.

Below is an example of a finished schematic. It should not resemble your schematic in content other than by having an IC with many connections and a battery power supply. Note that all components are connected---there are no deadends.

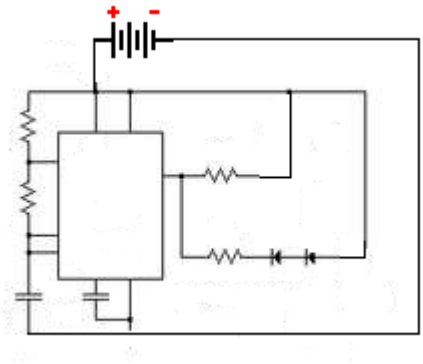

The map or schematic that you have just created is useful because it identifies the possible interactions between components. Like a map of roadways or a diagram of the circulatory system of a creature, the schematic defines the pathways. Now we must experiment to understand how these pathways create the behavior we observed at the start of this exercise.

Begin by spending a little time probing the circuit with the ends of your alligator-clip leads. *Circuit bending* refers to changing the sound your toy makes by creating new connections in the toy's circuit. Can you identify any new connections that change the sound of your toy? If so, mark the locations of the connections on your schematic with a "X," and proceed to the next set of investigations.