Purpose of ENGR 271

- To introduce A/D and D/A conversion.
- To work with sensors.
- To introduce feedback control.

Mechatronic System

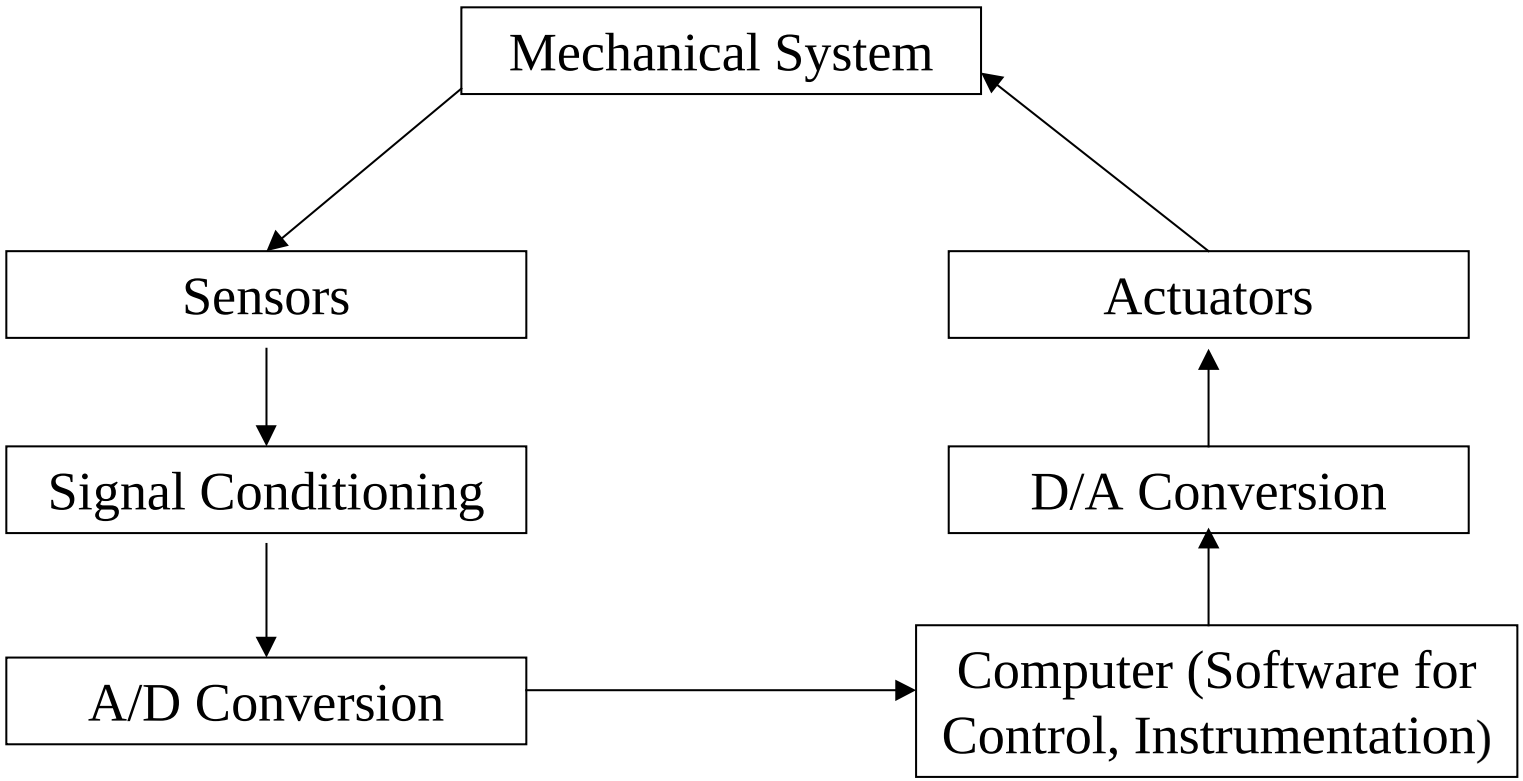

Digital Systems

- Transistors "on" or "off," 5 V or 0 V.
- Binary information, 0 or 1.
- Digital meters and scopes
- also depend on analog
- "Mixed-signal" devices

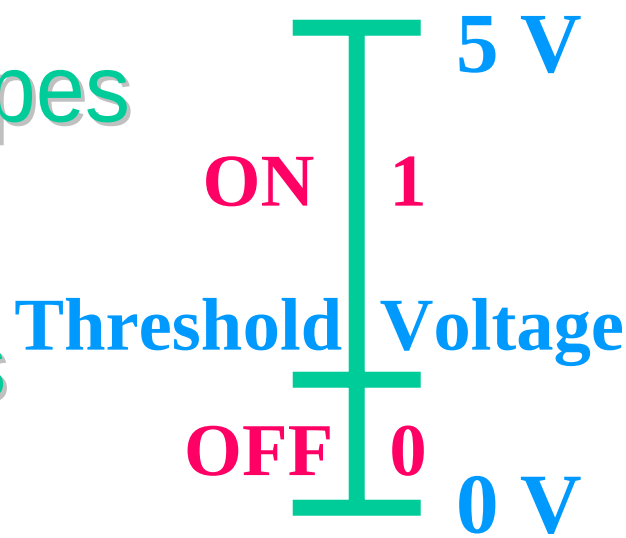

Analog Systems

- Information is proportional to the amount being represented.
- Signals are amplified.
- Use active State of Transistors.
- Radio and TV Broadcasting
- Strain gauges, tachometers, and thermocouples.

LED Operation

- Current through LED flows 1 way.
- Current flows if anode (+)
- is at a higher potential (V)
- than cathode (-).
- If voltage at the anode is higher,
- then LED is reverse biased and
- no current flows.

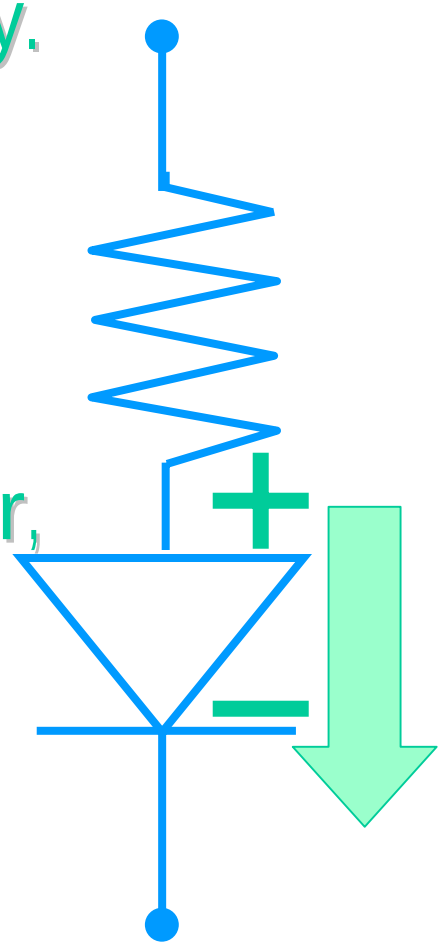

Ohm's Law

- Current is inversely related to resistance.
- Increase resistance, decrease current.

$$I = \frac{V}{R}$$

- Voltage, V, in Volts (V)
- Current, I, in Amperes (A)
- Resistance, R, in ohms (Ω)

Potentiometer

- Adjustable Reistance
- 100k = R1 + R2
- V1 + V2 = 5 V
- Voltage Divider:

$$V2 = 5 \cdot \frac{R2}{R1 + R2}$$

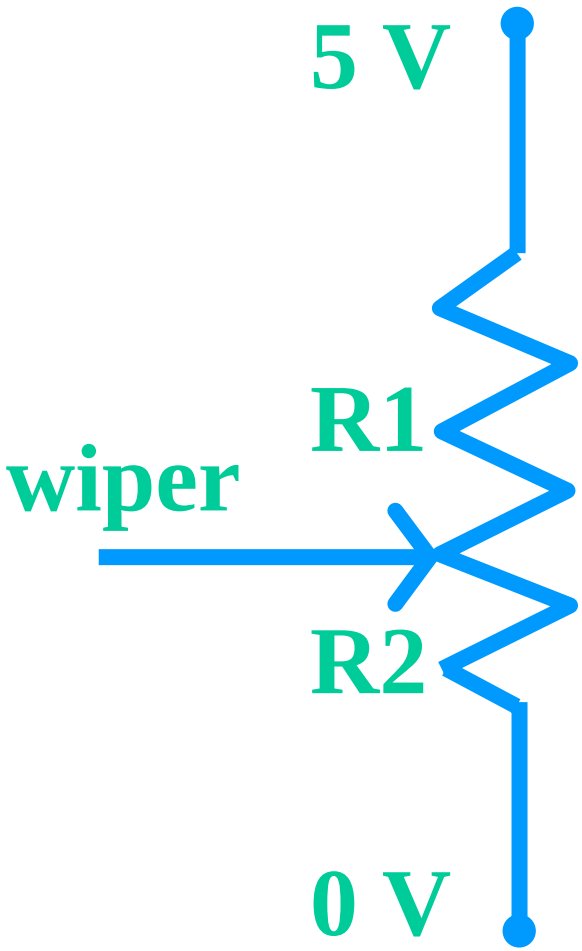

Op-Amp

- "Active" device (needs power).
- High-gain amplifier.
- Also used as a filter,
- comparator,
- signal generator.

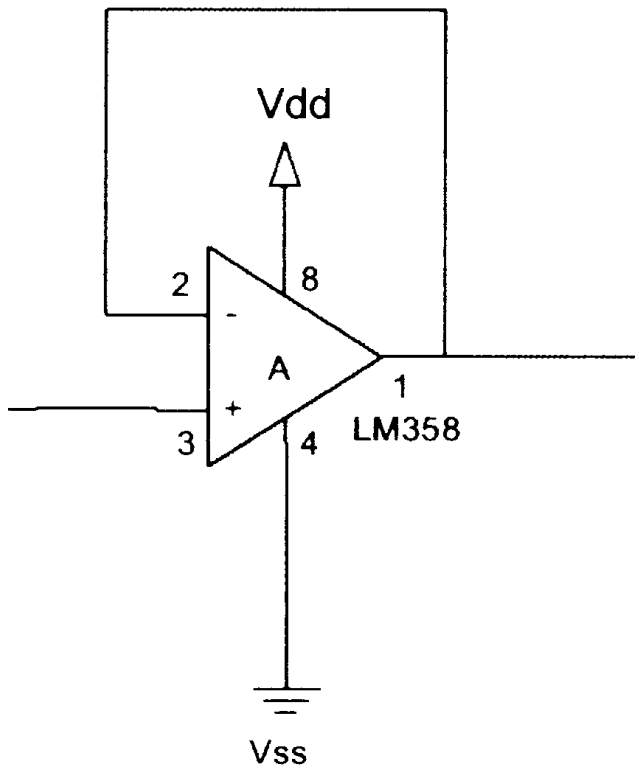

Voltage Follower

- Vout follows Vin (I.e., Vout = Vin).

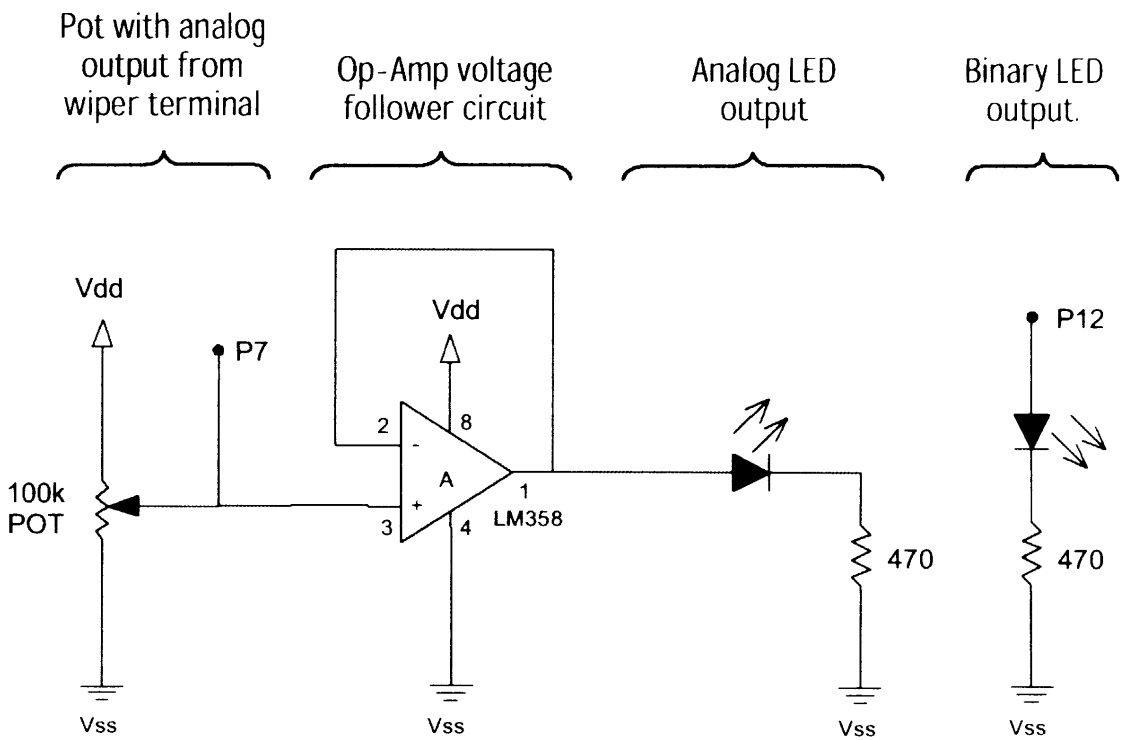

Comparator

V input > V threshold, then V output = V high

V input < V threshold, then V output = V low