Quiz 2 CSCI 363 Fall 2003 **Solution**
6 October, 2003

Problem 1 (5 points)
Suppose you are designing a sliding window protocol for a 10-Mbps point-to-point link to a stationary satellite revolving around Planet X at 6×10^4 km altitude. Assuming that each frame carries 10 KB of data, what is the minimum number of bits you need for the sequence number in this case when the RWS and SWS are equal? Assume the speed of light is 3×10^8 m/s.

First, compute one-way latency:

$$\frac{6\times10^4\,km}{3\times10^8\,m/\text{sec}} = \frac{6\times10^7\,m}{3\times10^8\,m/\text{sec}} = 2\times10^{-1}\,\text{sec} = .2\,\text{sec}$$

Next, compute bandwidth in packets per second. Remember, the "B" in 10KB is for bytes.

$$\frac{10Mbps}{10KB\,per\,packet} = \frac{1\times10^7\,bits/\text{sec}}{8\times10^4\,bits/packet} = 1.25\times10^2\,packets/\text{sec} = 125\,packets/\text{sec}$$

Now, compute the number of packets that can be sent during the round trip time.

$$125\,packets/\text{sec}\times.2\,\text{sec}\times2 = 50\,packets$$

Because RWS and SWS are equal, we need enough bits to number 2×50, or 100, packets. This requires 7 bits.

Problem 2 (5 points)
Given the extended LAN shown below, assume that bridge B2 and B4 suffer a near-simultaneous failure. Indicate which ports are **not** selected by the spanning tree algorithm after the recovery process and a new tree has been formed.

With B2 and B4 removed the mesh becomes a tree, so there are <u>no</u> ports, which are <u>not</u> selected. However, you might claim that with B2 and B4 failed, all of their ports are not selected.

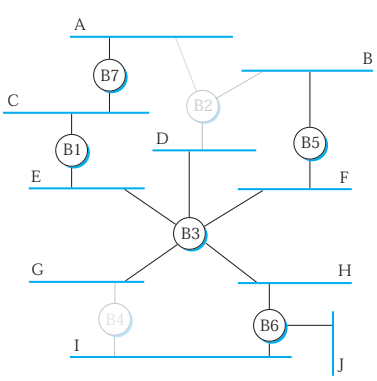

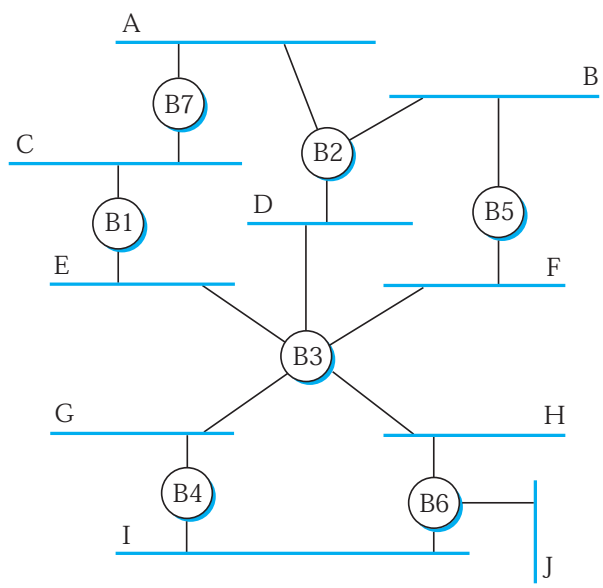

Problem 3 (6 points)
Draw a timeline diagram for the sliding window algorithm with SWS = RWS = 6 frames for the following when:

(1), The *initial* transmission of packet 2 is lost.
(2), The *initial* acknowledgment of packet 5 is lost.

Assume that:

(1), The receiver sends a cumulative acknowledgment after it receives all the outstanding frames. For example, it sends `ACK[5]` when it receives the lost frame `FRAME[2]` after it already received `FRAME[3]`, `FRAME[4]`, and `FRAME[5]`.
(2), Retransmission takes place upon timeout. Use a timeout interval of about 2×RTT.

Note that there is no mention of DUPACK in the problem and, consequently, there should be no mention of DUPACK in the solution. There are many correct answers due to the interaction of packets two and five. For simplicity, we separate the transmission lost of packet 2 and the acknowledgment loss of packet 5.

Packet 2 transmission lost

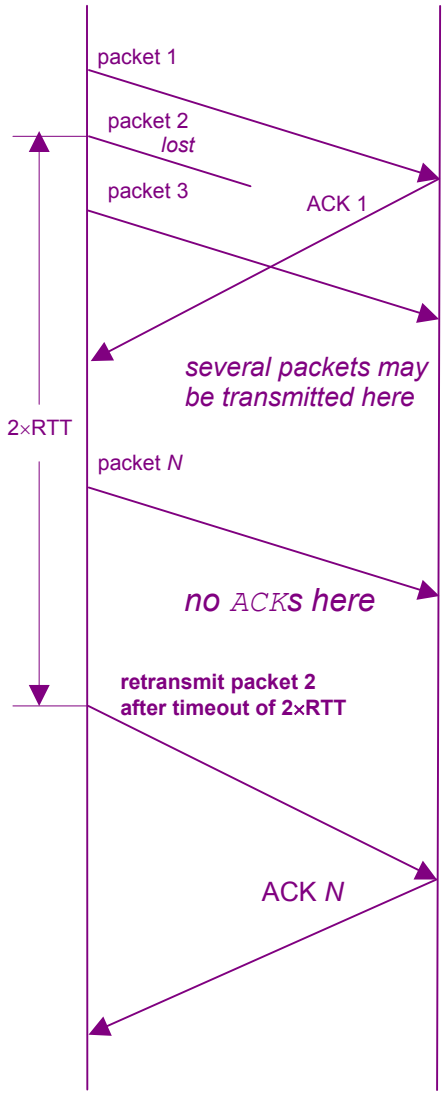

Packet 5 acknowledgment lost

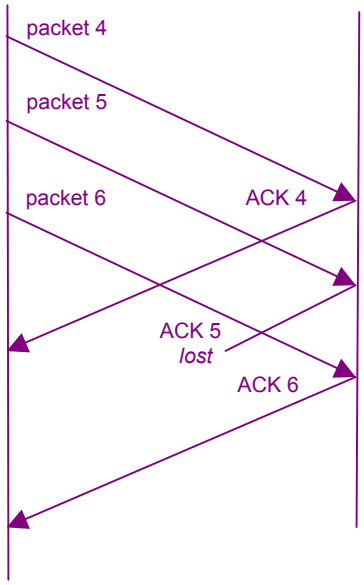

When sender receives ACK 6 it assumes packet 5 has been received. If the delay between the transmission of packet 5 and the receipt of ACK 6 is less than 2×RTT, there will be no change in the sender's transmissions. If the delay is greater, the sender will retransmit packet 5 when the 2×RTT timeout expires.

Problem 4 (4 points)
Consider the arrangement of learning bridges shown below. Assuming all are initially empty, give the forwarding tables for each of the bridges B1–B4 after the following transmissions:

A sends to D.
D sends to A.

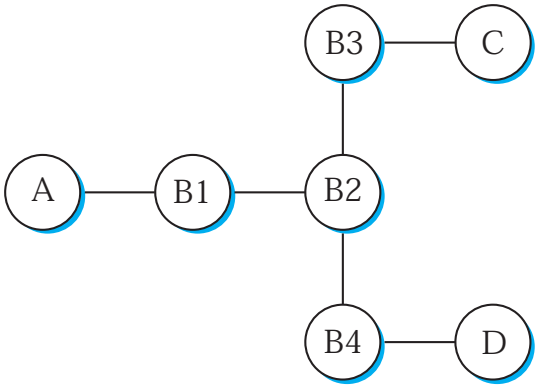

Note that the question asks for the contents of the forwarding tables and not for a list of which bridges see the transmissions. (The book's answer doesn't match the question.)

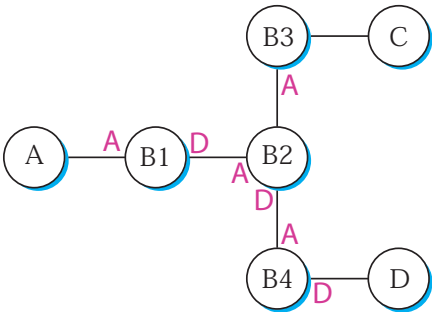

Host	*Port*
Bridge B1	
A	⇒ A
D	⇒ B2
Bridge B2	
A	⇒ B1
D	⇒ B4
Bridge B3	
A	⇒ B2
Bridge B4	
A	⇒ B2
D	⇒ D